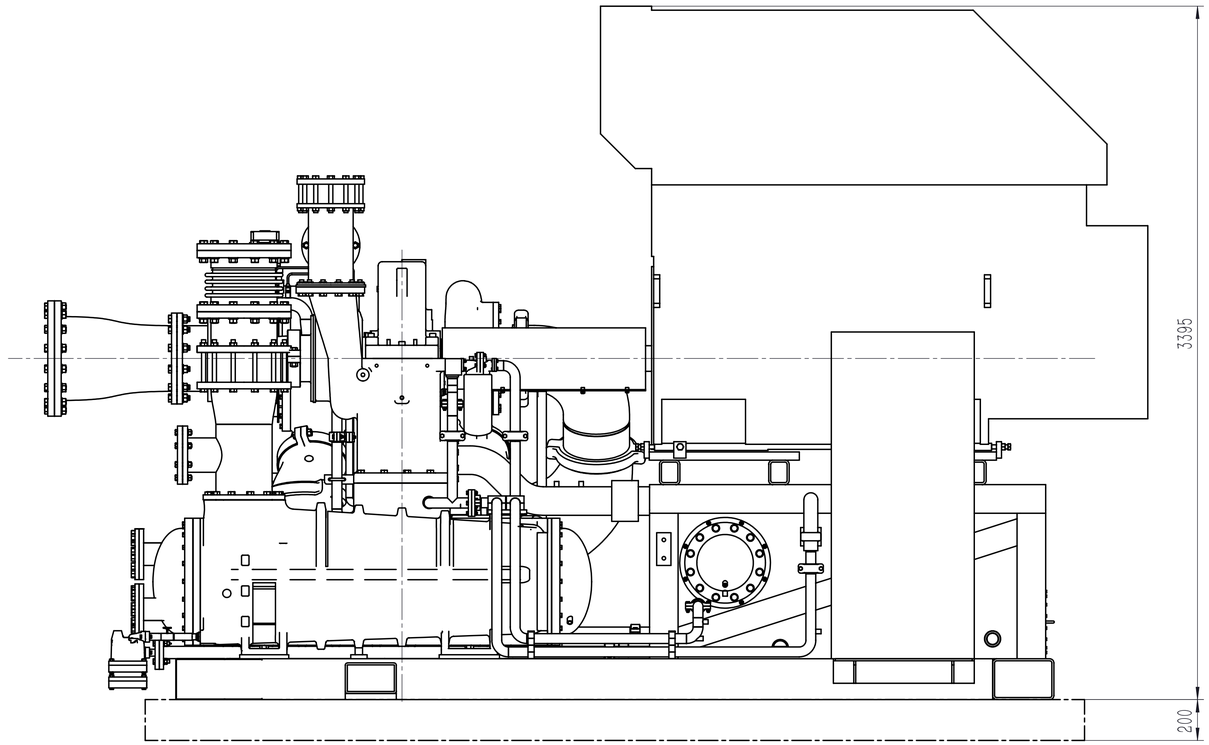

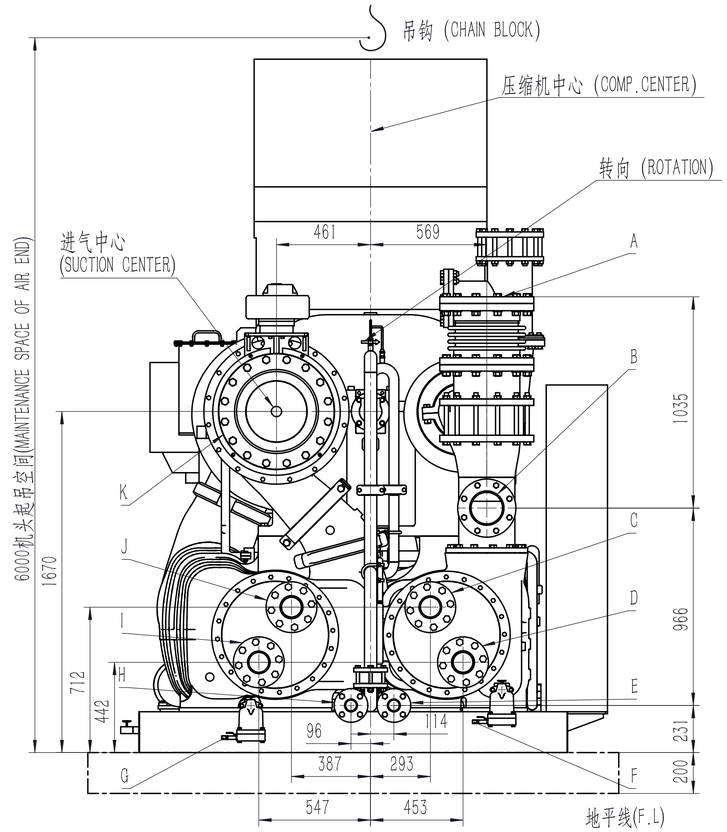

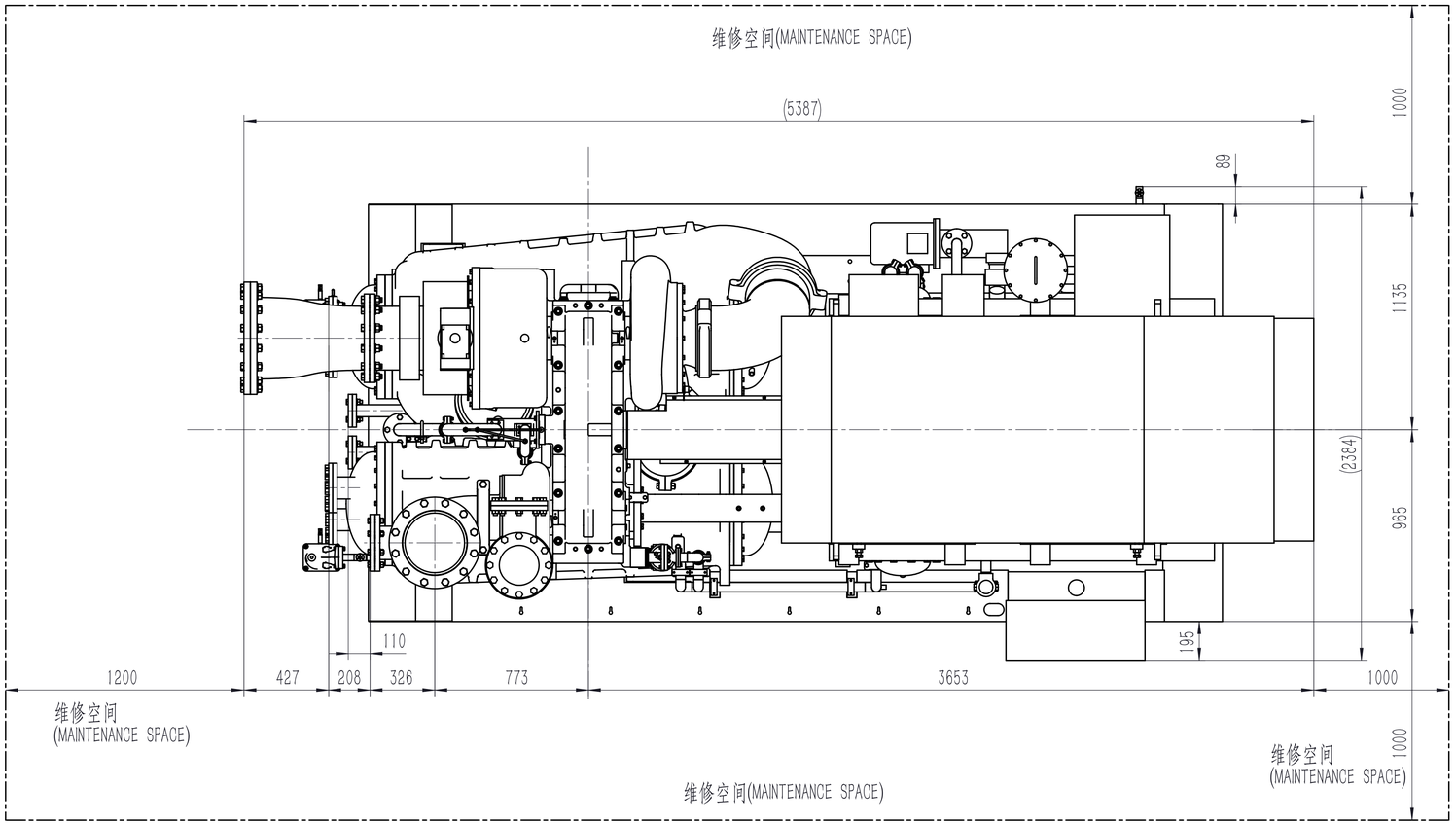

代号 (CODE)	规格 (SPEC)	标准(STANDARD)	配管尺寸 (PIPE SIZE)	备注(NOTE)
A	DN300	GB/T9119 PN16 FF	Φ323.9	气体出口 (GAS OUTLET)
B	DN150	GB/T9119 PN16 FF	Φ168.3	气体放空口出口 (GAS BLOW OFF OUTLINE)
C	DN100	HG/T20592 PN16 RF	Φ114.3	二级冷却器冷却水出口(COOLING WATER OUTLET FOR NO.2 COOLER.)
D	DN100	HG/T20592 PN16 RF	Φ114.3	二级冷却器冷却水进口(COOLING WATER INLET FOR NO.2 COOLER.)
E	DN50	GB/T9119 PN10 FF	Φ60.3	油冷却器冷却水出口(COOLING WATER OUTLET FOR OIL COOLER.)
F	Rc3/8"	螺纹 (SCREW)	DN10	二级冷却器排水出口 (DRAIN OUTLET FOR NO.2 COOLER)
G	Rc3/8"	螺纹 (SCREW)	DN10	一级冷却器排水出口 (DRAIN OUTLET FOR NO.1 COOLER)
H	DN50	GB/T9119 PN10 FF	Φ60.3	油冷却器冷却水进口(COOLING WATER INLET FOR OIL COOLER.)
I	DN100	HG/T20592 PN16 RF	Φ114.3	一级冷却器冷却水进口(COOLING WATER INLET FOR NO.1 COOLER.)
J	DN100	HG/T20592 PN16 RF	Φ114.3	一级冷却器冷却水出口(COOLING WATER OUTLET FOR NO.1 COOLER.)
K	DN400	GB/T9119 PN6 FF	Φ406.4	气体进口 (GAS INLET)

仅供参考

CAUTION	一般公差要求(机加工) TOLERANCE FOR GENERAL MACHINE CUT		粗糙度 ROUGHNESS					OOO KSLD Компрессор
THE DRAWING IS THE PROPERTY OF HUDONGHAI CENTRALTECHNOLOGY IN CHINA. THE DRAWING IS RECEIVED AS A CONFIDENTIAL DOCUMENT. DISTRIBUTION, COPYING, TRANSMISSION FOR PURPOSES OTHER THAN THOSE PRECISELY AND STRICTLY WITHIN THE SCOPE OF THE AGREEMENT OF HUDONGHAI	尺寸范围Dim.	公差Tolerance	符号	Ra μm	Rz μm			外形图
	0.5~6	±0.1						OUTLINE DRAWING
	6~30	±0.2						
	30~120	±0.3						
	120~315	±0.5						
	315~1000	±0.8						
	1000~2000	±1.2						
	2000~4000	±2.0						
	CLEARENCE FITS (AFTERWARD)							

制图 DRAWN	设计 DESIGNED	校对 CHECKED	审核 APPROVED
李法威	李法威	伏经宇	殷洪勇

DRAWING NO. OOOWK0005a